TDA1541A non-oversampling DAC

rev1.1b
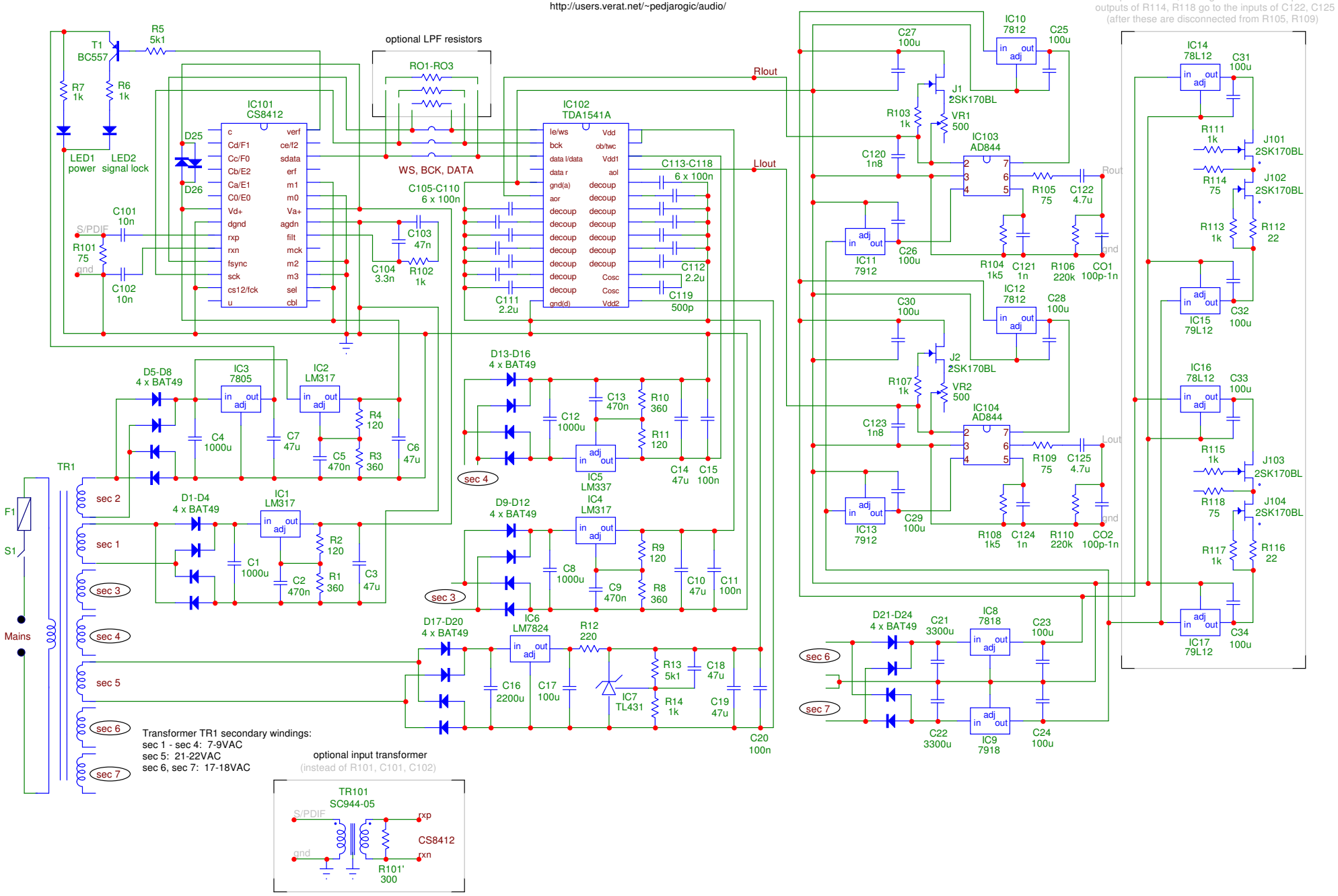
© Pedja Rogic, July - September 2004.
react_71@yahoo.com
http://users.verat.net/~pedjarogic/audio/